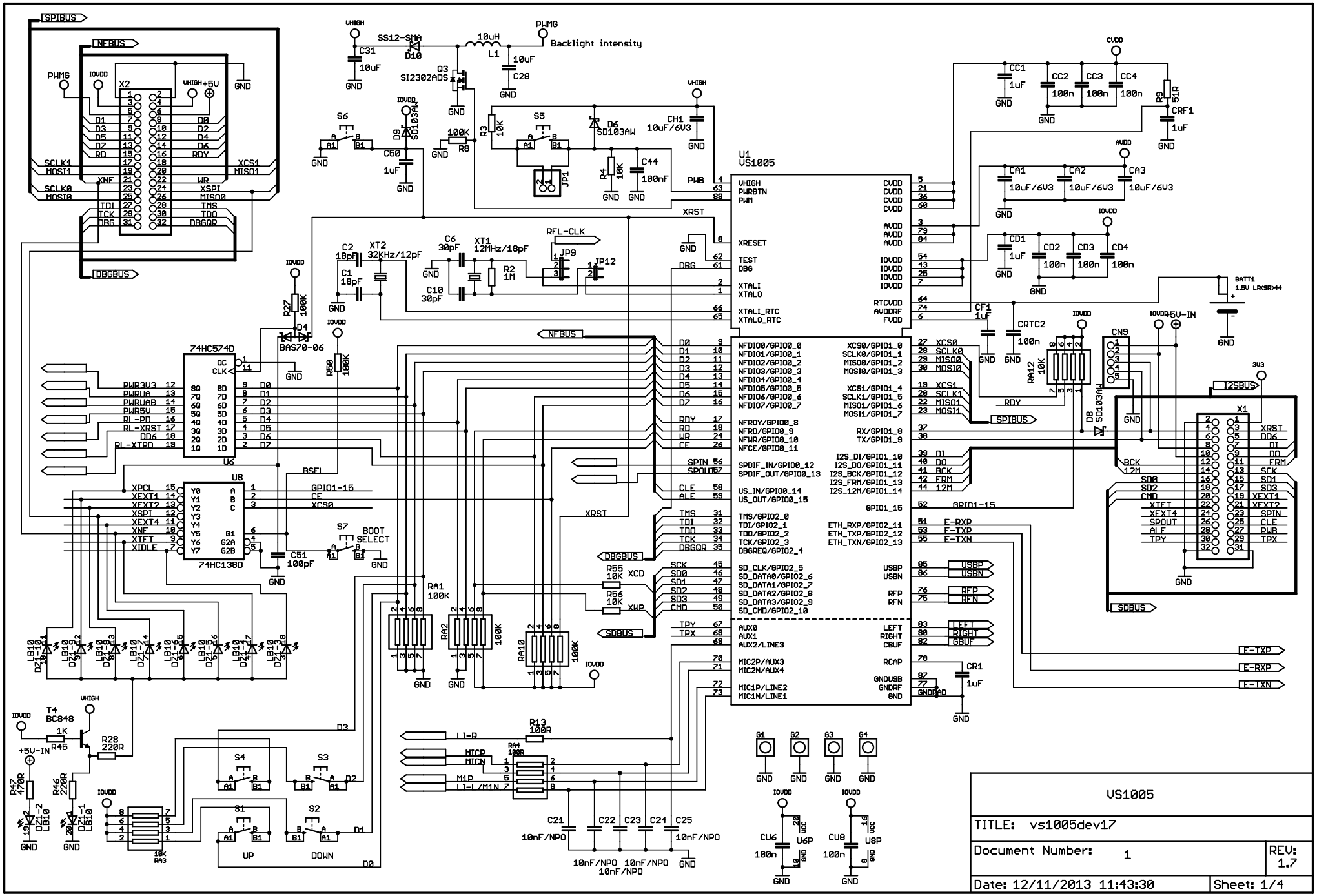
U1
VS1005
VS1005
TITLE: vs1005dev17
Document Number: 1
REV: 1.7
Date: 12/11/2013 11:43:30
Sheet: 1/4

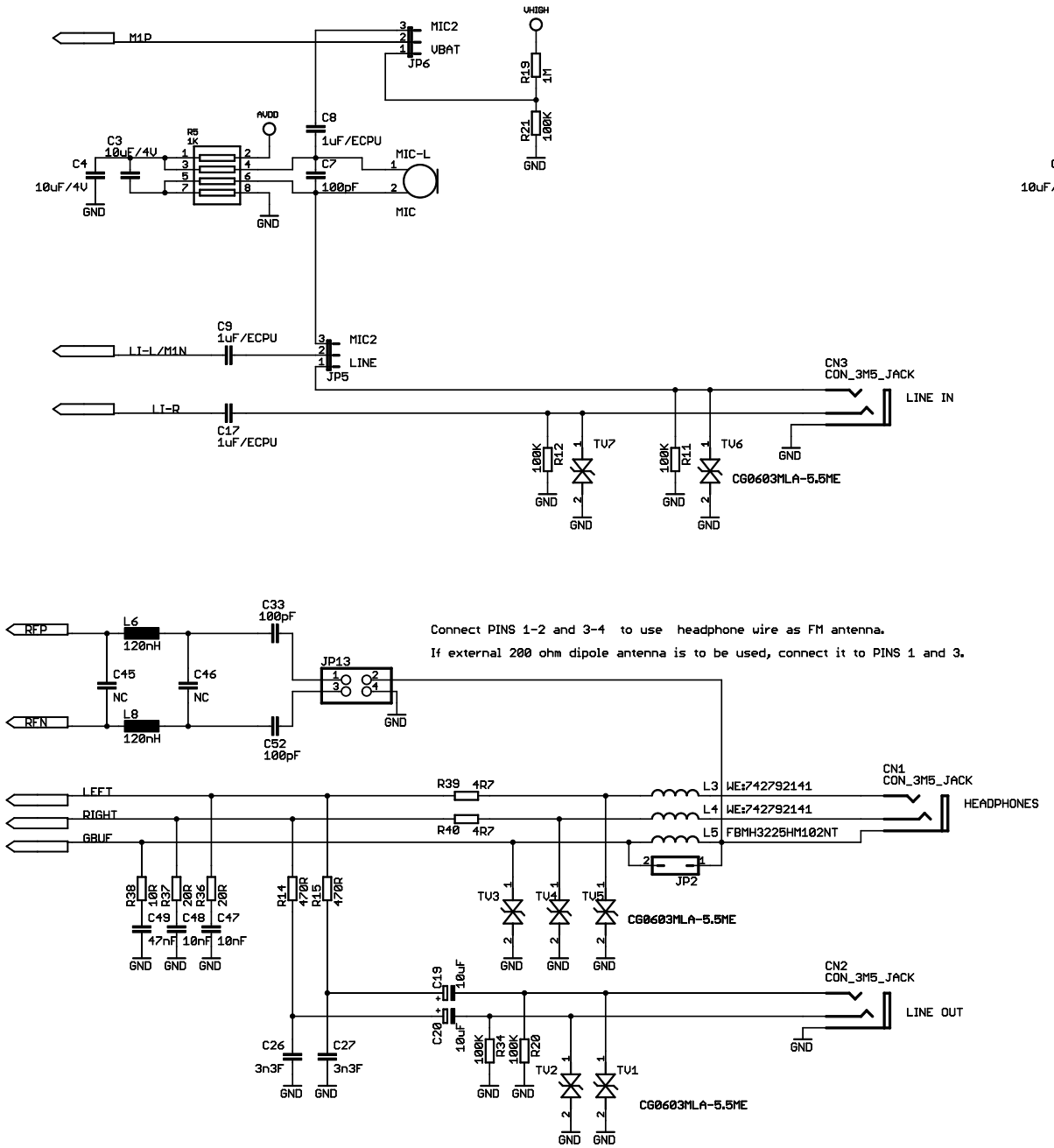

ANALOG I/O

TITLE: vs1005dev17

Document Number: 1

REV: 1.7

Date: 12/11/2013 11:43:30

Sheet: 2/4

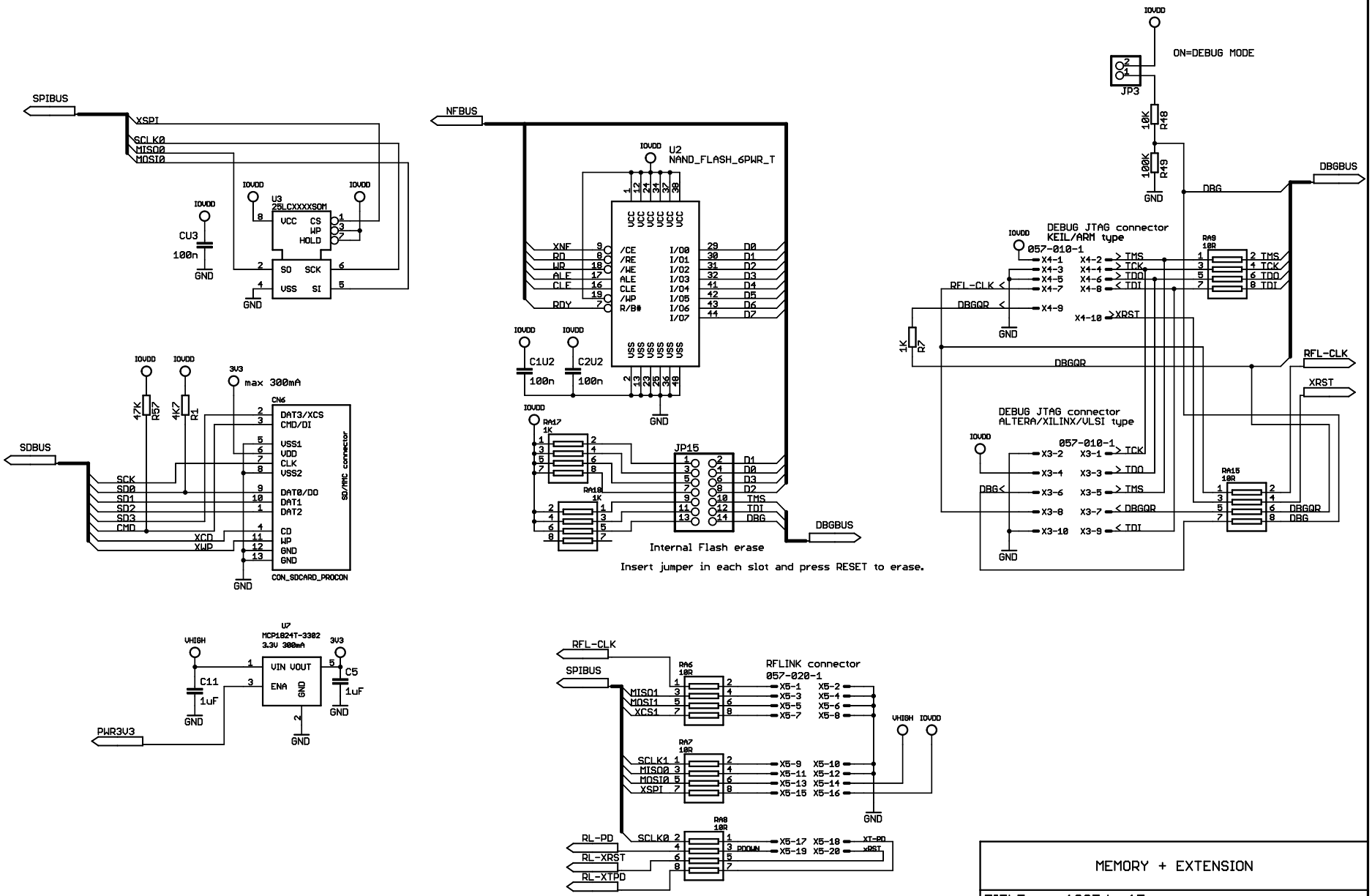

MEMORY + EXTENSION

TITLE: vs1005dev17

Document Number: 1

REV: 1.7

Date: 12/11/2013 11:43:30

Sheet: 3/4

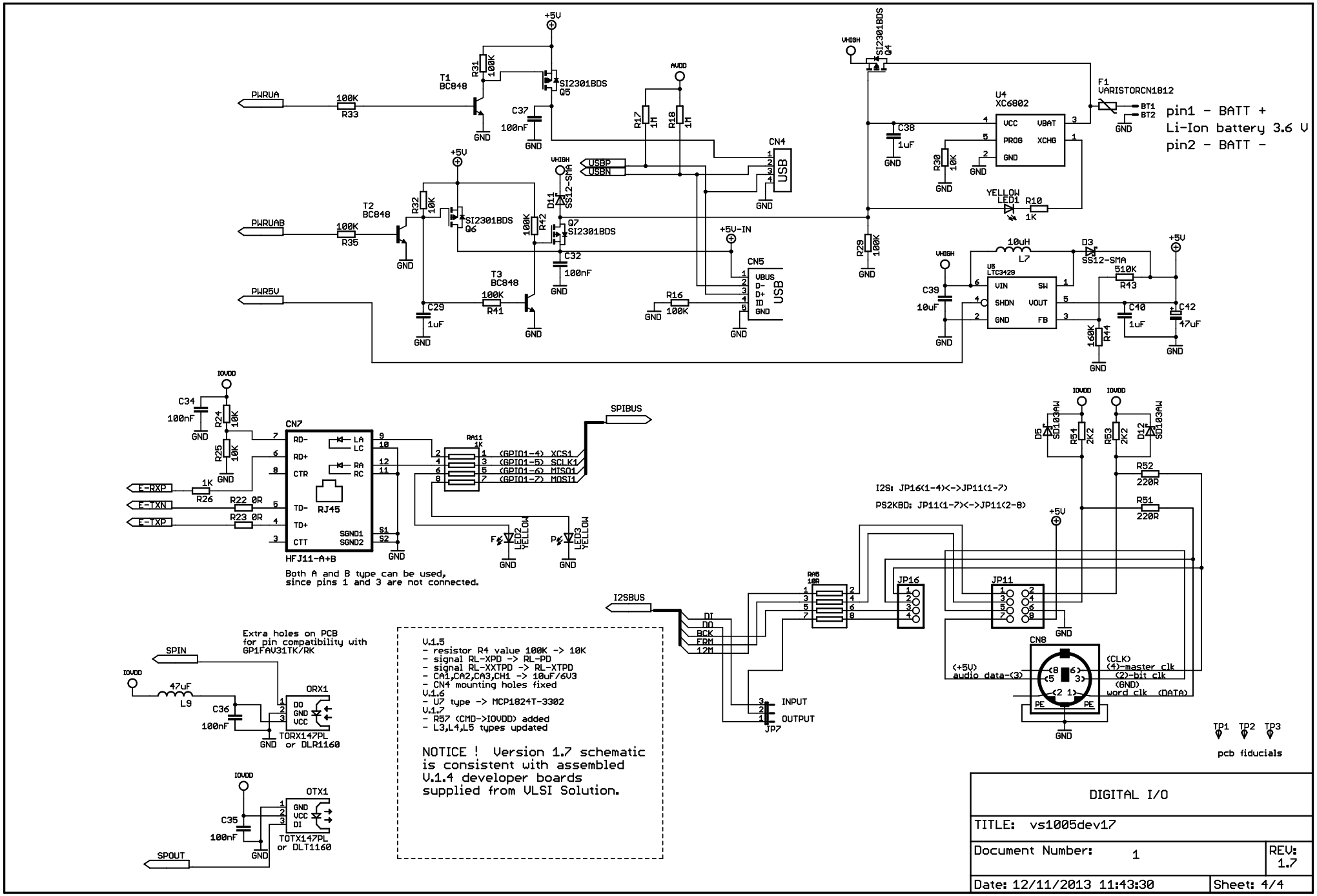
PWRUA
PWRUAB
PWR5V
T1 BC848
T2 BC848
T3 BC848
R33 100K
R35 100K
R31 100K
R32 10K
R41 100K
R42 100K
R17 1M
R18 1M
R16 100K
R29 100K
R30 10K
R10 1K
R43 510K
R44 160K
C37 100nF
C32 100nF
C29 1uF
C38 1uF
C39 10uF
C40 1uF
C42 47uF
Q5 SI2301BDS
Q6 SI2301BDS
Q7 SI2301BDS
Q4 SI2301BDS
D11 SS12-SMA
D3 SS12-SMA
L7 10uH
U4 XC6802
VCC VBAT PROG XCHG GND
U5 LTC3429
VIN SW SHDN VOUT GND FB
F1 VARISTORCN1812
BT1 BT2
pin1 - BATT +
Li-Ion battery 3.6 V
pin2 - BATT -
LED1 YELLOW
CN4 USB
USBP USBN
CN5 USB
VBUS D- D+ ID GND
+5V-IN
VHIGH
AVDD
+5V
GND
IOVDD
C34 100nF
R24 10K
R25 10K
CN7
RD- RD+ CTR TD- TD+ CTT
LA LC RA RC
SGND1 SGND2
RJ45
HFJ11-A+B
E-RXP
E-TXN
E-TXP
R26 1K
R22 0R
R23 0R
RA11 1K
(GPIO1-4) XCS1
(GPIO1-5) SCLK1
(GPIO1-6) MISO1
(GPIO1-7) MOSI1
SPIBUS
LED2 YELLOW
LED3 YELLOW
Both A and B type can be used,
since pins 1 and 3 are not connected.
D5 SD103AW
D12 SD103AW
R51 2K2
R53 2K2
R52 220R
R51 220R
I2S: JP16(1-4)<->JP11(1-7)
PS2KBD: JP11(1-7)<->JP11(2-8)
I2SBUS
DI DO BCK FRM 12M
RA5 10R
JP16
JP11
JP7
INPUT
OUTPUT
CN8
(+5V)
audio data-(3)
(CLK)
(4)-master clk
(2)-bit clk
(GND)
word clk (DATA)
PE
TP1 TP2 TP3
pcb fiducials
Extra holes on PCB
for pin compatibility with
GP1FAV31TK/RK
SPIN
47uF L9
C36 100nF
ORX1
DO GND VCC
TORX147PL
or DLR1160
OTX1
GND VCC DI
C35 100nF
TOTX147PL
or DLT1160
SPOUT
V.1.5
- resistor R4 value 100K -> 10K
- signal RL-XPD -> RL-PD
- signal RL-XXTPD -> RL-XTPD
- CA1,CA2,CA3,CH1 -> 10uF/6V3
- CN4 mounting holes fixed
V.1.6
- U7 type -> MCP1824T-3302
V.1.7
- R57 (CMD->IOVDD) added
- L3,L4,L5 types updated
NOTICE ! Version 1.7 schematic
is consistent with assembled
V.1.4 developer boards
supplied from VLSI Solution.
DIGITAL I/O
TITLE: vs1005dev17
Document Number: 1
REV: 1.7
Date: 12/11/2013 11:43:30
Sheet: 4/4