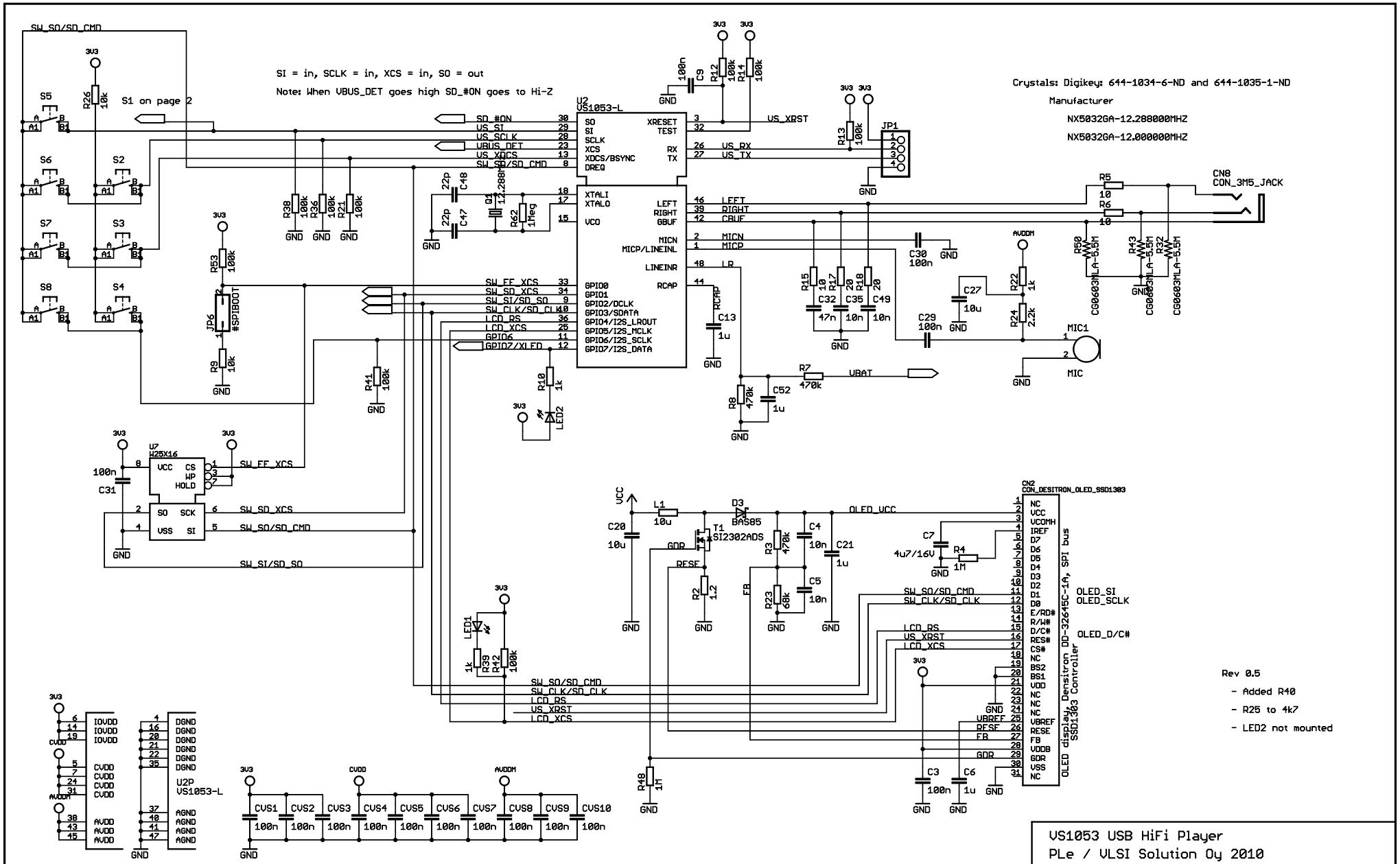

VS1053 USB HiFi Player
PLe / VLSI Solution Oy 2010

TITLE: vs1053_usb_hifi_player_05

Document Number:

REV: 0.5

Date: 4/21/2010 13:24:44

Sheet: 1/2

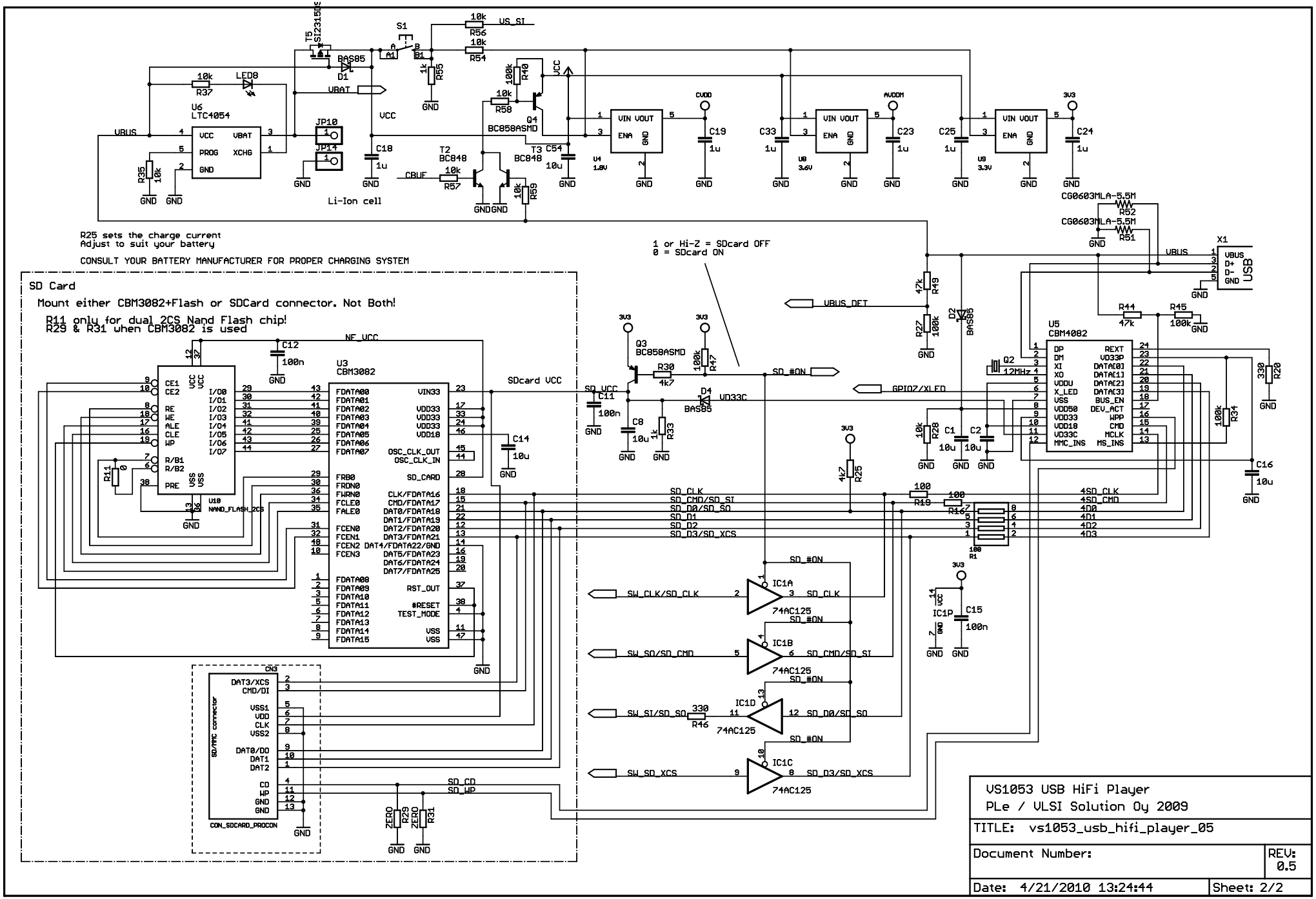
R25 sets the charge current
Adjust to suit your battery
CONSULT YOUR BATTERY MANUFACTURER FOR PROPER CHARGING SYSTEM
1 or Hi-Z = SDcard OFF
0 = SDcard ON
SD Card
Mount either CBM3082+Flash or SDCard connector. Not Both!
R11 only for dual 2CS Nand Flash chip!
R29 & R31 when CBM3082 is used
Li-Ion cell
U6 LTC4054
U3 CBM3082
U5 CBM4082
U10 NAND_FLASH_2CS
CON_SDCARD_PROCON
SD/MMC connector
74AC125
USB
VS1053 USB HiFi Player
PLe / VLSI Solution Oy 2009
TITLE: vs1053_usb_hifi_player_05
Document Number:
REV: 0.5
Date: 4/21/2010 13:24:44
Sheet: 2/2