VS1000 Audio Guide

ver. 1.2 / May 2017

Features

- VS1000 Audio Guide is a simple low-cost “take away” high-quality audio player for tourist attractions.
- Five capacitive touch buttons are integrated on the PCB (play/pause, prev, next, vol, language).
- The unit is powered when the headphone plug is inserted and the unit consumes no power after headphone plug is detached.
- High-performance Ogg Vorbis audio codec provides great balance between play time and audio quality.
- Firmware and audio content can be customized and they can be preloaded or dynamically updated in 3-12 mins (depending on size) by using a dedicated programmer.

Features

Battery clips are on the PCB

Supports dual or single SPI NOR FLASH memory

VS1000 chip

Headphone connector

Data bus for external programmer

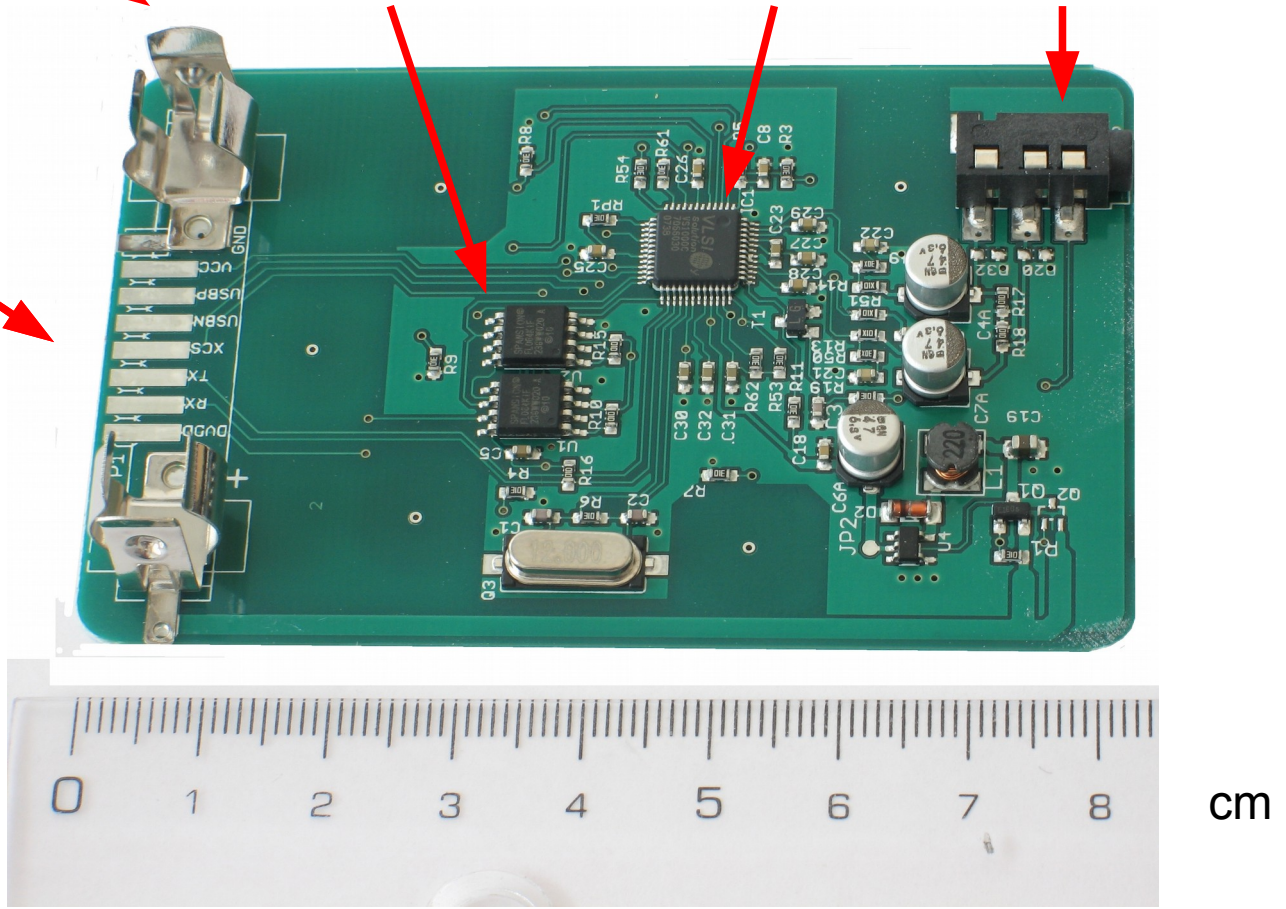

Features

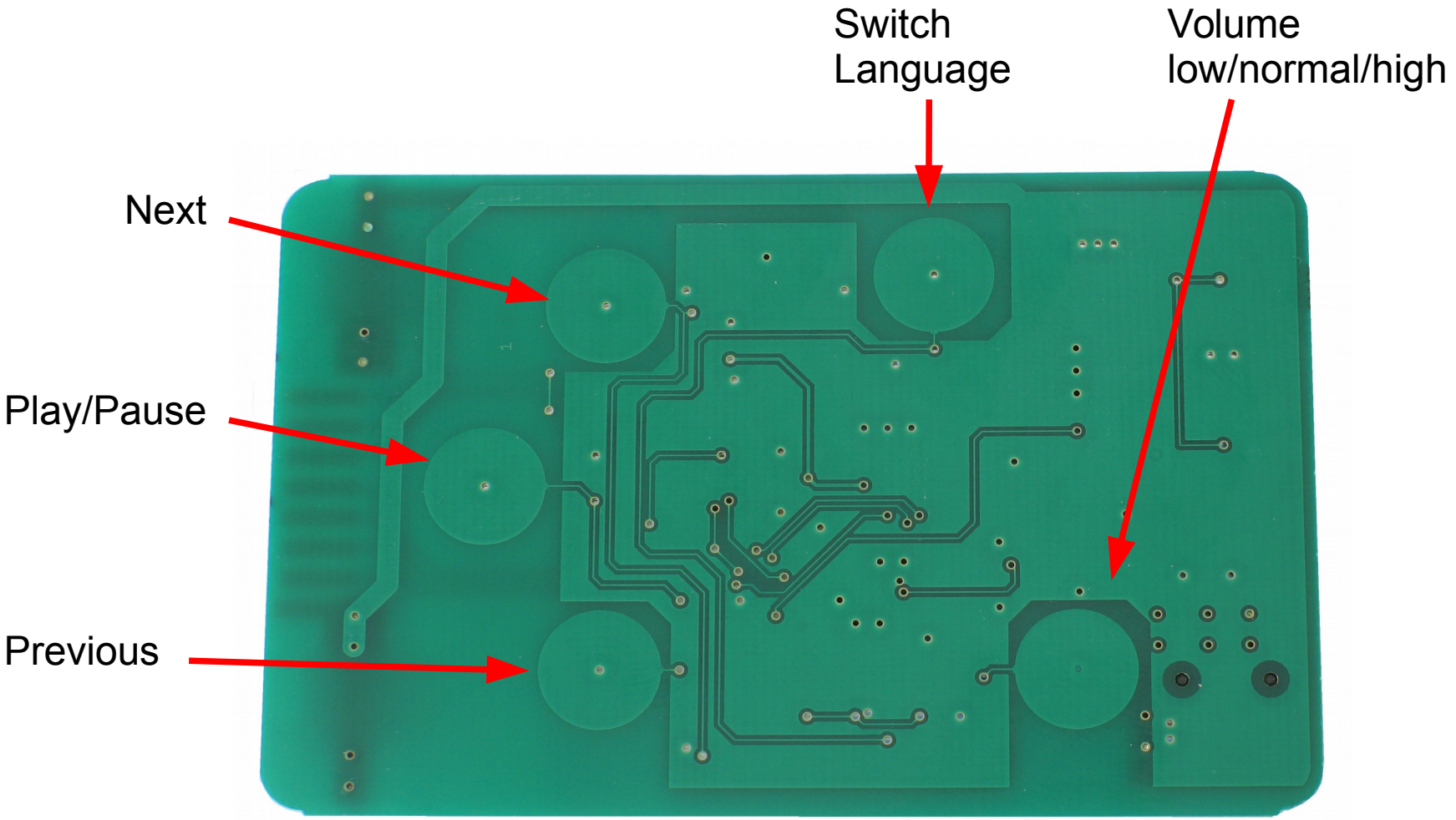

- Touch keys can be covered by paper or plastic sticker, sensitivity will be normalized automatically.

Specifications

- Hi-Fi quality sound, SNR > 90 dB
- Average bit rate can be adjusted from 8kbits/s to about 300kbits/s.
- Sample rate can be from 8kHz to 44.1kHz.
- Supports both stereo and mono files.
- Total memory size can be upto 16 Mbytes, which can be adjusted by assembling different SPI NOR FLASH chips without modifications to PCB.
- Total continuous playing time is over eight hours from a single AAA battery.
- Negligible power consumption in power off.

Language selection

- One suffix per language, the number of languages can be 1-8.
- The number of tracks can be different in each language.
- Pressing the “Language” button switches to the next language (by default starting from the first file).

Casing Alternatives

Paper

- Easy to modify in low volumes
- Different finish options

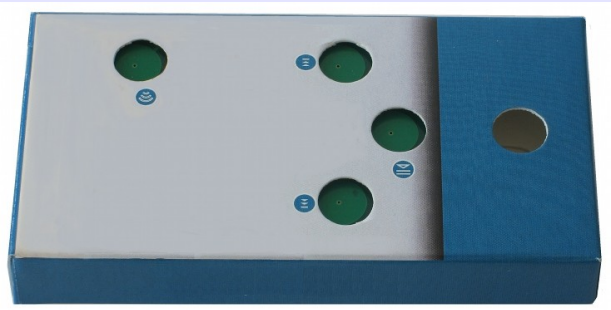

Plastic

- PCB with a sticker is the top cover
- Easy to customize with sticker
- Low unit cost in high volumes

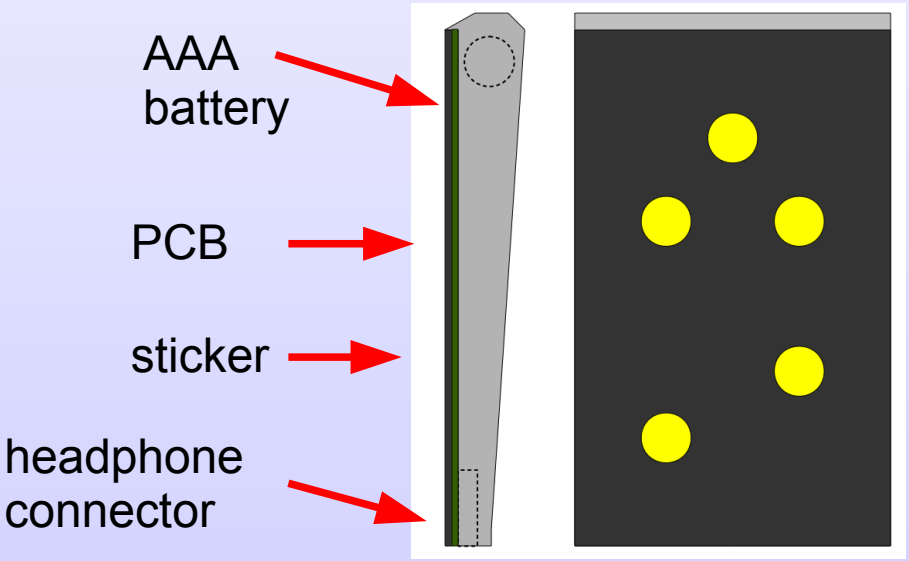

Block Diagram

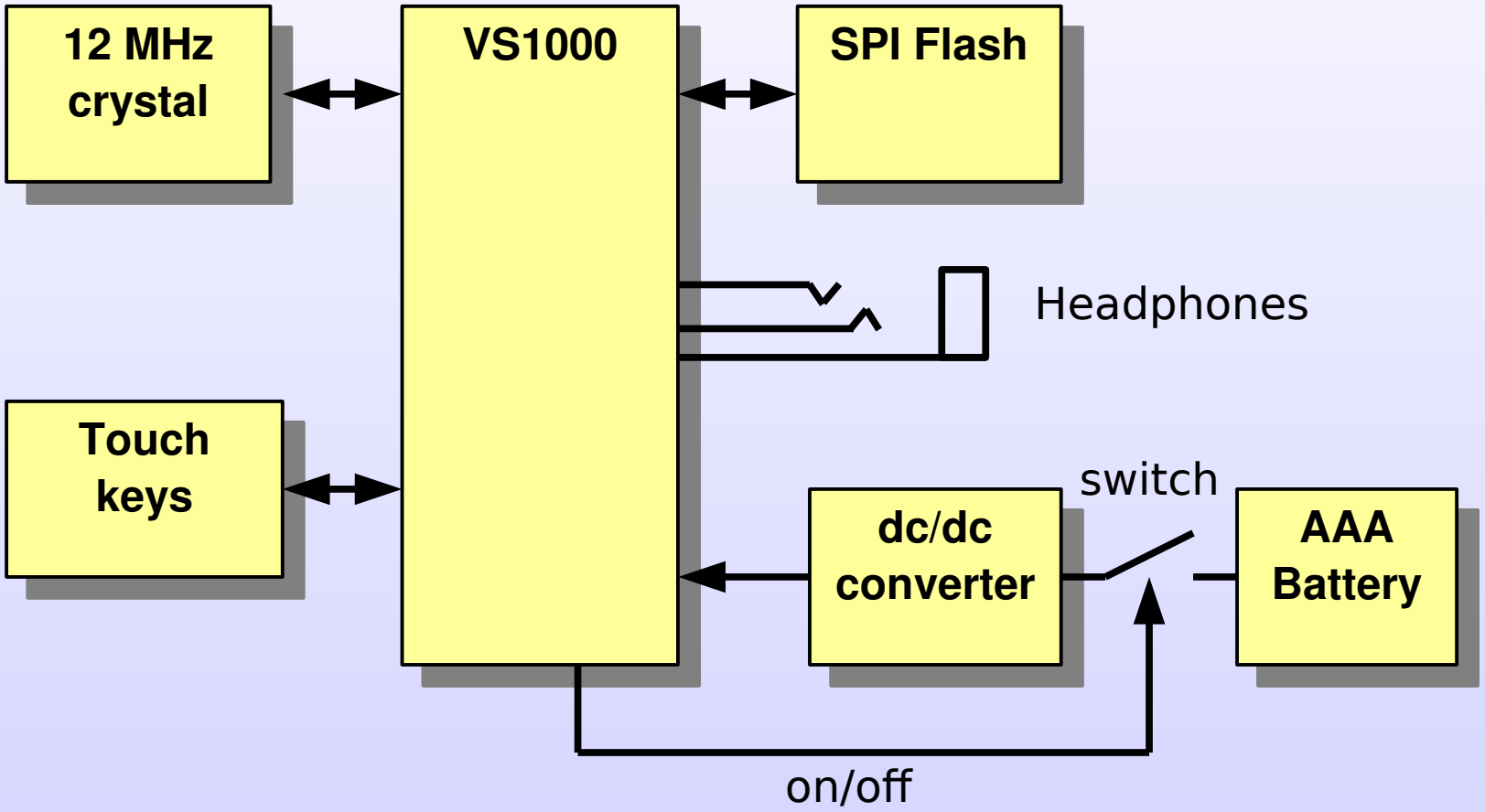

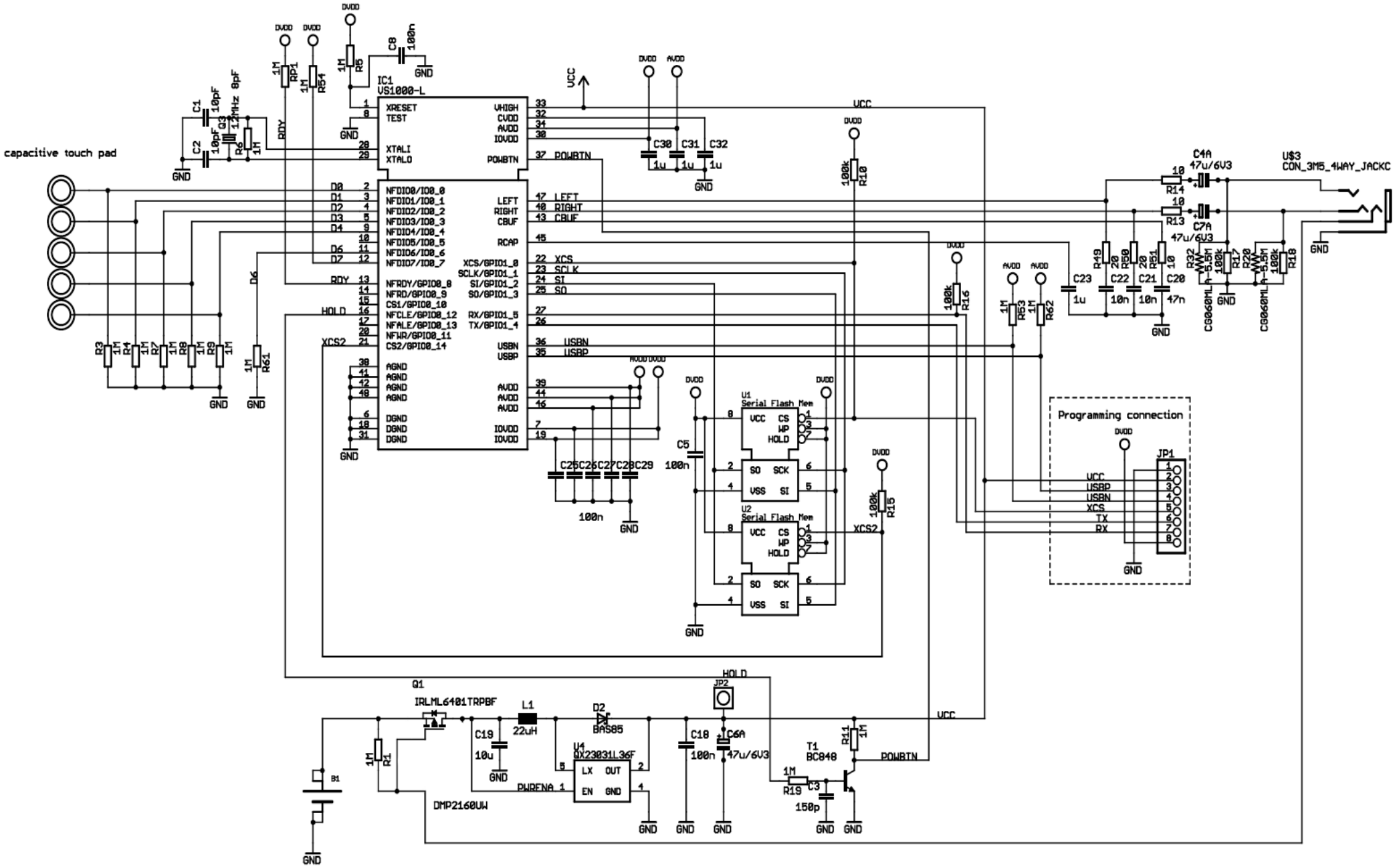
capacitive touch pad
IC1
VS1000-L
XRESET
TEST
XTALI
XTALO
VHIGH
CVDD
AVDD
IOVDD
POWBTN
NFDIO0/IO0_0
NFDIO1/IO0_1
NFDIO2/IO0_2
NFDIO3/IO0_3
NFDIO4/IO0_4
NFDIO5/IO0_5
NFDIO6/IO0_6
NFDIO7/IO0_7
NFRDY/GPIO0_8
NFRD/GPIO0_9
CS1/GPIO0_10
NFCLE/GPIO0_12
NFALE/GPIO0_13
NFWR/GPIO0_11
CS2/GPIO0_14
LEFT
RIGHT
CBUF
RCAP
XCS/GPIO1_0
SCLK/GPIO1_1
SI/GPIO1_2
SO/GPIO1_3
RX/GPIO1_5
TX/GPIO1_4
USBN
USBP
AGND
DGND
RDY
HOLD
XCS2
U1
Serial Flash Mem
U2
Serial Flash Mem
VCC
CS
WP
HOLD
SO
SCK
VSS
SI
Programming connection
JP1
U$3
CON_3M5_4WAY_JACKC
C4A
47u/6V3
C7A
47u/6V3
CG060ML
Q1
IRLML6401TRPBF
L1
22uH
D2
BAS85
U4
QX23031L36F
LX
OUT
EN
GND
PWRENA
DMP2160UW
B1
JP2
T1
BC848
C6A
47u/6V3
C19
10u
C18
100n
C3
150p
R19
R11
R1
R5
R10
R14
R13
R15
R16
R53
R62
R61
R3
R4
R7
R8
R9
R6
R49
R50
R51
R32
R17
R20
R18
C1
C2
C8
C30
C31
C32
C23
C22
C21
C20
C5
C25
C26
C27
C28
C29
Q3
12MHz
8pF
10pF
1M
100k
100n
1u
10
20
47n
10n
GND
DVDD
AVDD
VCC