HDMI connector TV/ARC

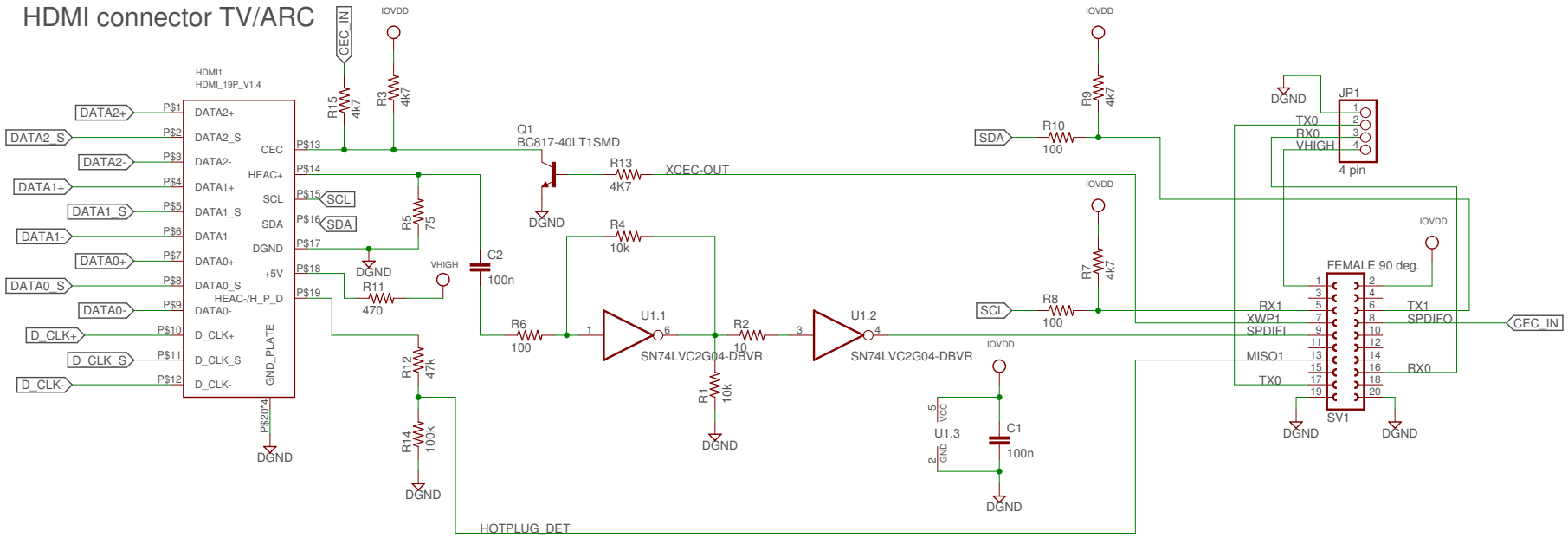

TP3 TP1 TP2

hdmi_arc11	
5.3.2019 14.08	
Sheet: 1/1	